Vokèra COMMERCIAL BY RIELLO

Commercial Heating Solutions



- WALL HUNG BOILERS
- FLOOR STANDING BOILERS
- BOILER CASCADE SYSTEMS
- PLATE HEAT EXCHANGERS
- HEAT INTERFACE UNITS
- CYLINDERS & BUFFER VESSELS
- FLUE OPTIONS

EDITION 4.0

HEAT INTERFACE UNIT RANGE

The heat interface unit range, the HIU Pro, is an integral part of our full-plant offering. Our range covers both Indirect HIUs which separates a dwelling, for example, from a primary central plant circuit, as well as, Direct HIUs that utilise the water from the system.



Radiator System | DHW | Underfloor Heating | Separating System

HIU Pro i20N & i30N

Indirect range - insulated enclosure

- Two plate heat exchangers; one separating the system, the second for DHW production
- DHW controlled by thermostatic and 2-way proportional valves which ensure instantaneous DHW at the right temperature avoiding waste and delay
- Easy installation, ready to be connected
- Suitable for apartments, houses and centralised heating systemsd



Radiator System | DHW | Underfloor Heating | Separating System

HIU Pro i20P & i30P

Indirect range

- Two plate heat exchangers; one separating the system, the second for DHW production
- DHW controlled by thermostatic and 2-way proportional valves which ensure instantaneous DHW at the right temperature avoiding waste and delay
- Easy installation, ready to be connected
- Suitable for apartments, houses and centralised heating systems



Radiator System | DHW

HIU Pro d20P & d30P

Direct range

- One plate heat exchanger for instantaneous DHW production
- High heat exchanger performance
- Minimal risk of limescale
- Easy installation, ready to be connected
- Suitable for apartments, houses and centralised heating systems

Accessories for full heating and cold water energy metering; both MBUS and Ultrasonic (additional, see accessories on page 82).
Energy Data Loggers and Energy Data Software available.

Dimensions

HIU Pro i20P/N & i30P/N

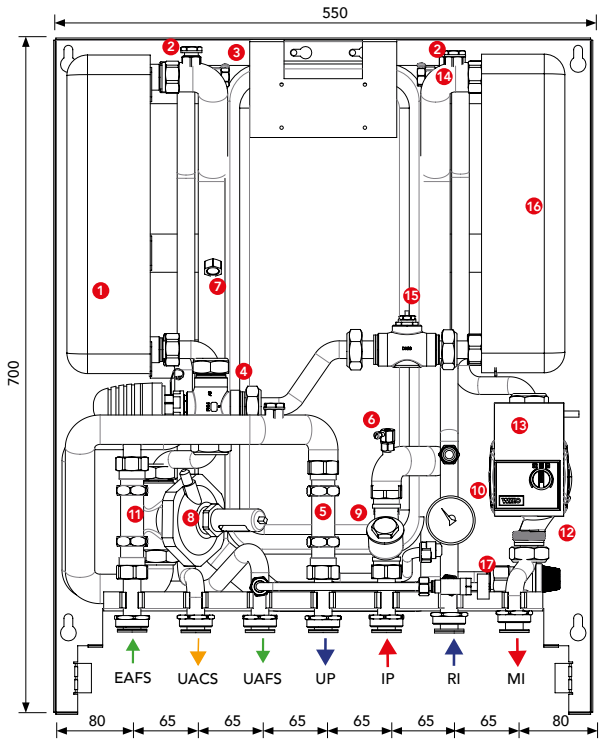

1. Brazed plate iron steel heat exchanger (DHW circuit)
2. Manual air vent valve
3. Sensor pocket for thermostatic valve primary circuit (DHW side)
4. Thermostatic valve primary circuit (DHW side)
5. Fitting piece for heat meter ¾"M-110mm
6. Sensor pocket for heat meter
7. Sensor pocket for differential valve
8. Differential valve (heating circuit pressure stabiliser)
9. Filter
10. Manometer
11. Fitting piece for cold water meter ¾"M-110mm
12. Safety valve heating circuit (3 bar)
13. High efficiency pump type Wilo YONOS PARA 15/6
14. Sensor pocket for thermostatic valve primary side (heating side)
15. 2-way valve primary side (heating side)
16. Brazed plate iron steel heat exchanger (heating circuit)*
17. Loading tap

*Plate heat exchangers insulated on i20P & i30P

UP	Primary circuit return
IP	Primary circuit supply
UACS	Domestic hot water
UAFS	Domestic cold water return
EAFS	Domestic cold water supply
MI	Heating supply
RI	Heating return
UAFS	Domestic cold water return

HIU Pro d20P & d30P

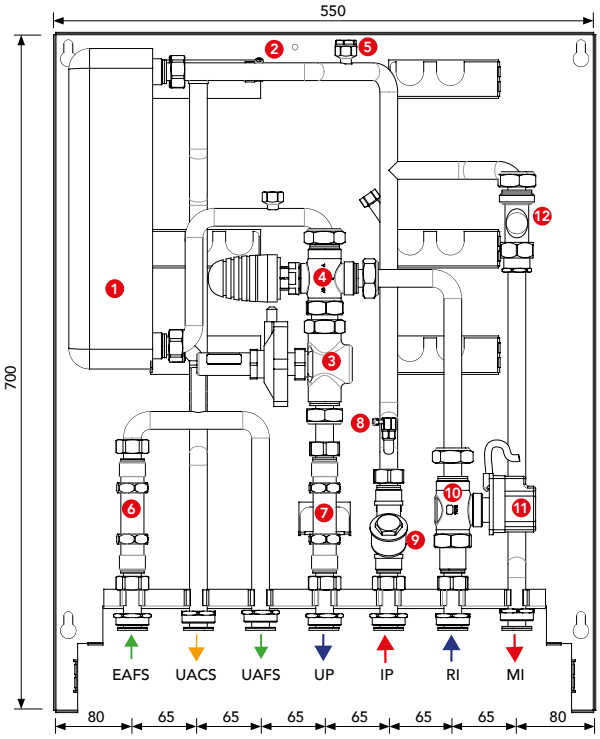

1. Brazed plate iron steel heat exchanger
2. Sensor pocket for thermostatic valve (DHW exit)
3. Differential valve 5÷30 KPa
4. 3-way proportional thermostatic valve
5. Manual air vent valve
6. Fitting piece for cold water meter ¾"M-110mm
7. Fitting piece for heat meter ¾"M-110mm (heat meter available in the following versions: single-jet with M-Bus, radio and ultrasonic)
8. Sensor pocket for heat meter
9. Filter
10. 2-way ON/OFF valve
11. Electric actuator 230V or 24V (supplied separately)
12. Lockshield valves

UP	Primary circuit return
IP	Primary circuit supply
UACS	Domestic hot water
UAFS	Domestic cold water return
EAFS	Domestic cold water supply
MI	Heating supply
RI	Heating return
UAFS	Domestic cold water return

Technical data

HIU Pro i20P/N & i30P/N

TECHNICAL DATA	HIU PRO i20P & i30P
MAX TEMPERATURE	85°C
PRIMARY CIRCUIT MAX. FLOW RATE	1400 L/H
NECESSARY PRIMARY HEAD	6M H^2O
MAX PRESSURE	10 BAR
DIFFERENTIAL VALVE	5 - 30 KPA
PRIMARY HYDRAULIC CONNECTION	M-F 1" - 3/4"
HEATING HYDRAULIC CONNECTION	M-F 1" - 3/4"
CONNECTIONS DCW	M-F 1" - 3/4"

TECHNICAL DATA	HIU PRO i20P & i30P
DIMENSIONS BUILT-IN VERSION	570 X 800 X 160mm
DIMENSIONS WALL HUNG VERSION	550 X 700 X 165mm
WEIGHT (INCLUDING CONNECTION JIG)	25kg
MODULE SUPPLY	230V AC
HEAT METER (OPTIONAL)	1.5 MC/H
TYPE OF FLUID	H^2O
MAIN COMPONENT MATERIAL	MS58, CU

Heating technical data

	PRIMARY CIRCUIT FLOW RATE	PRIMARY CIRCUIT SUPPLY TEMP	PRIMARY CIRCUIT RETURN TEMP	HEATING FLOW	HEATING CIRCUIT SUPPLY TEMP	HEATING CIRCUIT RETURN TEMP	HEATING CAPACITY	HEAT CIRCULATION PUMP
	M3/H	°C	°C	M3/H	°C	°C	kW	M.C.A.
20 PLATES 0.455 M2	1.4	85	63.5	1.2	75	55	28	4.8
	0.63	85	55.5	1.4	65	55	14	4
	0.168	85	33	1.6	38	33	7	3.4
30 PLATES 0.708 M2	1.4	85	62	1.55	75	55	35	4
	0.63	85	55	1.8	65	55	20	3
	0.168	85	33	1.7	38	33	10	3.3

Technical data domestic water (HIU Pro i20P/N) - 0.455 m^2

		ΔT 35°C (10/45°C)		ΔT 40°C (10/50°C)		ΔT 45°C (10/55°C)	
PRIMARY CIRCUIT FLOW RATE	PRIMARY CIRCUIT SUPPLY TEMP	HEAT EXCHANGER MAX CAPACITY	FLOWRATE	HEAT EXCHANGER MAX CAPACITY	FLOWRATE	HEAT EXCHANGER MAX CAPACITY	FLOWRATE
M3/H	°C	kW	L/MIN	kW	L/MIN	kW	L/MIN
0.8	55	23.02	9.50	17.57	6.30	-	-
1	55	27.12	11.20	20.39	7.30	-	-
1.2	55	30.90	12.70	22.93	8.20	-	-
1.4	55	34.36	14.14	25.26	9.10	-	-
0.8	60	29.10	12.00	24.85	9.00	19.10	6.10
1	60	34.47	14.20	29.25	10.55	22.20	7.10
1.2	60	39.53	16.30	33.26	12.00	24.90	8.00
1.4	60	44.23	18.21	36.99	13.33	27.40	8.80
0.8	65	38.00	15.60	31.07	11.20	26.70	8.60
1	65	45.30	18.60	36.85	13.29	31.40	10.10
1.2	65	51.26	22.00	42.20	15.20	35.70	11.50
1.4	65	57.67	22.00	47.20	17.00	36.90	12.70
0.8	70	39.88	16.42	36.80	13.27	33.13	10.63
1	70	47.82	19.69	43.88	15.82	39.24	12.60
1.2	70	55.28	22.00	50.49	18.20	44.89	14.40
1.4	70	66.50	27.20	62.34	20.44	50.16	16.09
0.8	75	47.80	19.50	42.20	15.22	39.40	12.65
1	75	57.44	23.50	50.56	18.23	46.70	15.00
1.2	75	66.30	27.20	59.50	21.30	53.40	17.10
1.4	75	75.30	30.00	67.20	23.80	59.91	19.22
0.8	80	51.90	20.90	47.43	17.10	44.56	14.29
1	80	62.10	25.40	57.00	20.55	53.29	17.09
1.2	80	71.50	28.50	67.80	24.10	61.47	19.72
1.4	80	80.50	30.00	76.20	27.40	69.19	22.10
0.8	85	56.20	23.10	52.49	18.93	49.86	15.09
1	85	68.20	27.80	63.80	22.90	59.85	19.20
1.2	85	79.10	30.00	73.70	26.50	69.24	22.20
1.4	85	90.20	30.00	83.20	30.00	78.12	25.00

Technical data domestic water (HIU Pro i30P/N) - 0.708 m²

		ΔT 35°C (10/45°C)		ΔT 40°C (10/50°C)		ΔT 45°C (10/55°C)	
PRIMARY CIRCUIT FLOW RATE	PRIMARY CIRCUIT SUPPLY TEMP	HEAT EXCHANGER MAX CAPACITY	FLOWRATE	HEAT EXCHANGER MAX CAPACITY	FLOWRATE	HEAT EXCHANGER MAX CAPACITY	FLOWRATE
M3/H	°C	kW	L/MIN	kW	L/MIN	kW	L/MIN
0.8	55	26.1	10.7	20.2	7.4	-	-
1	55	31.1	12.7	24.2	8.7	-	-
1.2	55	35.7	14.6	27.5	9.9	-	-
1.4	55	40.3	16.5	30.5	11.0	-	-
0.8	60	32.2	13.2	28.2	10.2	22.3	7.1
1	60	38.8	15.9	33.5	12.1	26.4	8.4
1.2	60	44.9	18.4	38.5	13.6	30.1	9.6
1.4	60	50.4	20.7	43.2	15.6	33.6	10.7
0.8	65	39.1	16.0	34.6	12.5	30.5	9.7
1	65	46.4	19.0	41.5	14.9	36.5	11.6
1.2	65	53.5	21.9	47.9	17.3	41.5	13.2
1.4	65	60.0	24.8	54.0	19.5	46.4	14.9
0.8	70	43.3	17.8	40.5	14.6	37.0	11.9
1	70	52.4	21.6	48.7	17.6	44.3	14.2
1.2	70	61.0	25.1	56.5	20.4	51.1	16.4
1.4	70	69.3	28.5	64.0	23.1	57.6	18.5
0.8	75	48.8	20.0	46.0	16.6	43.3	13.8
1	75	58.6	24.0	55.6	20.0	52.1	16.6
1.2	75	68.4	28.0	64.7	23.3	60.3	19.2
1.4	75	78.0	32.2	73.4	26.5	67.8	21.8
0.8	80	53.5	22.0	51.3	12.5	48.6	15.6
1	80	65.1	26.8	62.1	22.4	58.7	18.8
1.2	80	76.2	31.4	72.5	26.1	68.3	21.9
1.4	80	86.8	35.8	82.5	29.7	77.4	24.8
0.8	85	58.4	24.0	56.4	20.3	54.0	17.3
1	85	71.2	29.3	68.4	24.7	65.4	21.0
1.2	85	83.5	34.4	80.1	28.9	76.3	24.5
1.4	85	95.3	40.0	91.3	32.9	86.7	27.8

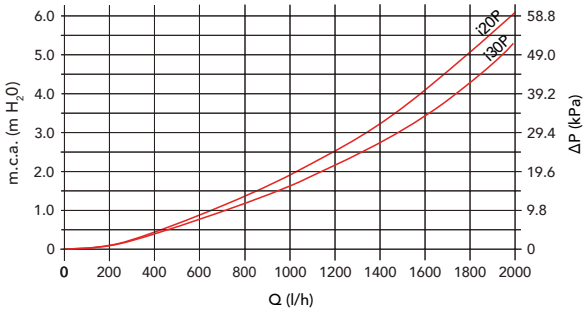

Max working pressure DHW circuit: 6 bar

Max pressure domestic water: 0.2 bar

Heat exchanger material: stainless steel AISI 316 - 20/30 plates

If the hardness of the water exceeds 25° fH, it should be treated at the inlet to the central heating system, so as to prevent fouling caused by hard water or corrosion due to aggressive water. Remember that even small deposits measuring just a few millimetres in thickness will cause, due to their low thermal conductivity, a reduction in performance on the DHW side.

Pressure loss heating circuit

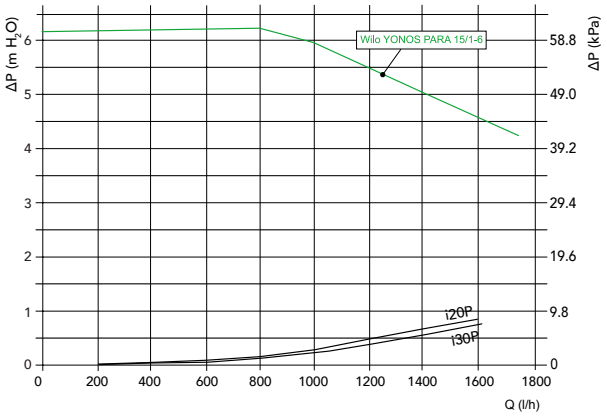

Hydraulic circuit: HIU Pro i20P/N & i30P/N

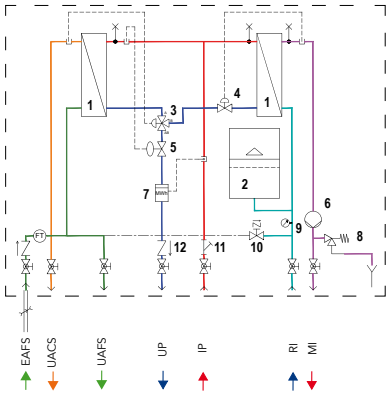

UP	Primary circuit return
IP	Primary circuit supply
UACS	Domestic hot water
UAFS	Domestic cold water return
EAFS	Domestic cold water supply
MI	Heating supply
RI	Heating return
UAFS	Domestic cold water return

Technical data

HIU Pro d20P & d30P

TECHNICAL DATA	HIU PRO d20P & d30P
MAX TEMPERATURE	85°C
PRIMARY CIRCUIT MAX. FLOW RATE	1400 L/H
NECESSARY PRIMARY HEAD	6M H^2O
MAX PRESSURE	10 BAR
DIFFERENTIAL VALVE	5 - 30 KPA
PRIMARY HYDRAULIC CONNECTION	M-F 1" - 3/4"
HEATING HYDRAULIC CONNECTION	M-F 1" - 3/4"
CONNECTIONS DCW	M-F 1" - 3/4"

TECHNICAL DATA	HIU PRO d20P & d30P
DIMENSIONS BUILT-IN VERSION (LXHXD)	570 X 800 X 160mm
DIMENSIONS WALL HUNG VERSION (LXHXD)	550 X 700 X 165mm
WEIGHT (INCLUDING CONNECTION JIG)	23kg
MODULE SUPPLY	230V AC
HEAT METER (OPTIONAL)	1.5 MC/H
TYPE OF FLUID	H^2O
MAIN COMPONENT MATERIAL	MS58, CU

Technical data domestic water (HIU Pro d20P) - 0.455 m^2

		ΔT 35°C (10/45°C)		ΔT 40°C (10/50°C)		ΔT 45°C (10/55°C)	
PRIMARY CIRCUIT FLOW RATE	PRIMARY CIRCUIT SUPPLY TEMP	HEAT EXCHANGER MAX CAPACITY	FLOWRATE	HEAT EXCHANGER MAX CAPACITY	FLOWRATE	HEAT EXCHANGER MAX CAPACITY	FLOWRATE
M3/H	°C	kW	L/MIN	kW	L/MIN	kW	L/MIN
0.8	55	23.02	9.50	17.57	6.30	-	-
1	55	27.12	11.20	20.39	7.30	-	-
1.2	55	30.90	12.70	22.93	8.20	-	-
1.4	55	34.36	14.14	25.26	9.10	-	-
0.8	60	29.10	12.00	24.85	9.00	19.10	6.10
1	60	34.47	14.20	29.25	10.55	22.20	7.10
1.2	60	39.53	16.30	33.26	12.00	24.90	8.00
1.4	60	44.23	18.21	36.99	13.33	27.40	8.80
0.8	65	38.00	15.60	31.07	11.20	26.70	8.60
1	65	45.30	18.60	36.85	13.29	31.40	10.10
1.2	65	51.26	22.00	42.20	15.20	35.70	11.50
1.4	65	57.67	22.00	47.20	17.00	36.90	12.70
0.8	70	39.88	16.42	36.80	13.27	33.13	10.63
1	70	47.82	19.69	43.88	15.82	39.24	12.60
1.2	70	55.28	22.00	50.49	18.20	44.89	14.40
1.4	70	66.50	27.20	62.34	20.44	50.16	16.09
0.8	75	47.80	19.50	42.20	15.22	39.40	12.65
1	75	57.44	23.50	50.56	18.23	46.70	15.00
1.2	75	66.30	27.20	59.50	21.30	53.40	17.10
1.4	75	75.30	30.00	67.20	23.80	59.91	19.22
0.8	80	51.90	20.90	47.43	17.10	44.56	14.29
1	80	62.10	25.40	57.00	20.55	53.29	17.09
1.2	80	71.50	28.50	67.80	24.10	61.47	19.72
1.4	80	80.50	30.00	76.20	27.40	69.19	22.10
0.8	85	56.20	23.10	52.49	18.93	49.86	15.09
1	85	68.20	27.80	63.80	22.90	59.85	19.20
1.2	85	79.10	30.00	73.70	26.50	69.24	22.20
1.4	85	90.20	30.00	83.20	30.00	78.12	25.00

Technical data domestic water (HIU Pro d30P) - 0.708 m²

		ΔT 35°C (10/45°C)		ΔT 40°C (10/50°C)		ΔT 45°C (10/55°C)	
PRIMARY CIRCUIT FLOW RATE	PRIMARY CIRCUIT SUPPLY TEMP	HEAT EXCHANGER MAX CAPACITY	FLOWRATE	HEAT EXCHANGER MAX CAPACITY	FLOWRATE	HEAT EXCHANGER MAX CAPACITY	FLOWRATE
M3/H	°C	kW	L/MIN	kW	L/MIN	kW	L/MIN
0.8	55	26.1	10.7	20.2	7.4	-	-
1	55	31.1	12.7	24.2	8.7	-	-
1.2	55	35.7	14.6	27.5	9.9	-	-
1.4	55	40.3	16.5	30.5	11.0	-	-
0.8	60	32.2	13.2	28.2	10.2	22.3	7.1
1	60	38.8	15.9	33.5	12.1	26.4	8.4
1.2	60	44.9	18.4	38.5	13.6	30.1	9.6
1.4	60	50.4	20.7	43.5	15.6	33.6	10.7
0.8	65	39.1	16.0	34.6	12.5	30.5	9.7
1	65	46.4	19.0	41.5	14.9	36.5	11.6
1.2	65	53.5	21.9	47.9	17.3	41.5	13.2
1.4	65	60.0	24.8	54.0	19.5	46.4	14.9
0.8	70	43.3	17.8	40.5	14.6	37.0	11.9
1	70	52.4	21.6	48.7	17.6	44.3	14.2
1.2	70	61.0	25.1	56.5	20.4	51.1	16.4
1.4	70	69.3	28.5	64.0	23.1	57.6	18.5
0.8	75	48.8	20.0	46.0	16.6	43.3	13.8
1	75	58.6	24.0	55.6	20.0	52.1	16.6
1.2	75	68.4	28.0	64.7	23.3	60.3	19.2
1.4	75	78.0	32.2	73.4	26.5	67.8	21.8
0.8	80	53.5	22.0	51.3	12.5	48.6	15.6
1	80	65.1	26.8	62.1	22.4	58.7	18.8
1.2	80	76.2	31.4	72.5	26.1	68.3	21.9
1.4	80	86.8	35.8	82.5	29.7	77.4	24.8
0.8	85	58.4	24.0	56.4	20.3	54.0	17.3
1	85	71.2	29.3	68.4	24.7	65.4	21.0
1.2	85	83.5	34.4	80.1	28.9	76.3	24.5
1.4	85	95.3	40.0	91.3	32.9	86.7	27.8

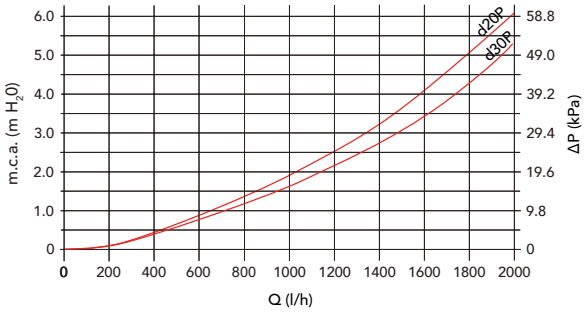

Max working pressure DHW circuit: 6 bar

Max pressure domestic water: 0.2 bar

Heat exchanger material: stainless steel AISI 316 - 20/30 plates

If the hardness of the water exceeds 25° fH, it should be treated at the inlet to the central heating system, so as to prevent fouling caused by hard water or corrosion due to aggressive water. Remember that even small deposits measuring just a few millimetres in thickness will cause, due to their low thermal conductivity, a reduction in performance on the DHW side.

Pressure loss heating circuit

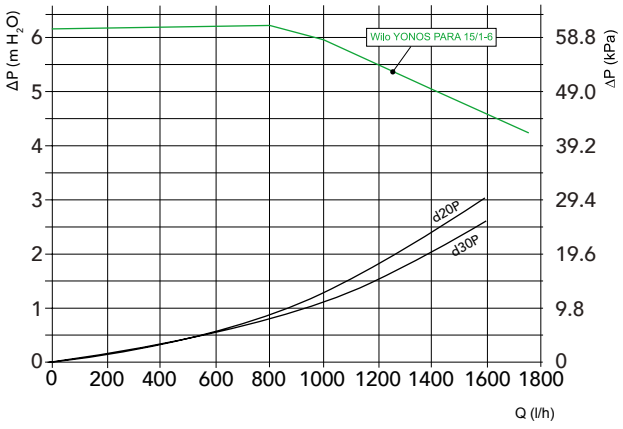

Hydraulic circuit: HIU Pro d20P & d30P

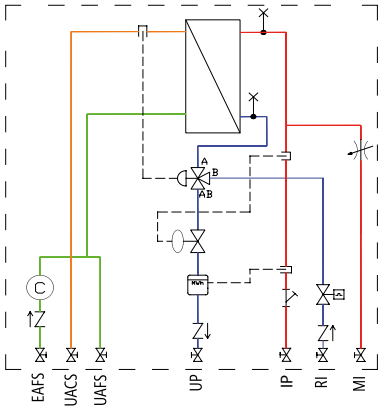

UP	Primary circuit return
IP	Primary circuit supply
UACS	Domestic hot water
UAFS	Domestic cold water return
EAFS	Domestic cold water supply
MI	Heating supply
RI	Heating return
UAFS	Domestic cold water return

HIU Pro accessories & components

CODE		DESCRIPTION
29450055		HIU PRO I20P N
29450056		HIU PRO I30P N
29450057	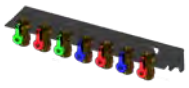	CONNECTION JIG - *ONLY WITH HIU WITH EPP INSULATED COVER*
29450058		COVER EPP PRO
29450561		STAND OFF BRACKETS (*SUITABLE ONLY FOR EPP INSULATED COVER HIU VERSION)*
29450562		INSULATING PIPING KIT - *FOR THE CONNECTION OF THE PRIMARY CIRCUIT PIPES UPWARD (ONLY WITH STAND OFF BRACKETS) - (SUITABLE ONLY FOR EPP INSULATED COVER HIU VERSION)*
29450564		WALL BRACKET - *(ONLY FOR WALL COVER)*
29450059		THERMOSTATIC KIT - THERMOSTATIC ACTUATOR
29450014		SYSTEM LOADING KIT

CODE		DESCRIPTION
29450039		THERMOSTATIC KIT - THERMOSTATIC ACTUATOR
29450016		WATER METER C - VOL AFS ¾"M - *SINGLE-JET WATER METER WITH DRY DIAL FOR COLD DOMESTIC WATER WITH PULSE OUTPUT.*
29450038		HOT WATER SECONDARY RETURN (WILO PARA 15/7 Z IPWM)
29450048		ULTRA CFMS ENERGY COUNTER QN1.5 MC/H L 110MM X 3/4" - 3I
29450563		DATA CONCENTRATOR MOD. CD - B 32 - 32 LOVATO LVT/3 - *16 MULTIDATA S1 (SUITABLE UP TO 32 HIU)*
29450017		CD - B - 60 DATA LOGGER - CD - B 60 - *60 LOVATO LVT/5_EYRON - 30 MULTIDATA WR3*
29450045		DATA COLLECTOR B120 LVT/3 60 MULTID - CD - B 120 -*120 LOVATO LVT/5_EYRON - 60 MULTIDATA WR3*
29450046		DATA COLLECTOR B250 LVT/3 125 MULTID - CD - B 250 - *250 LOVATO LVT/5_EYRON - 125 MULTIDATA WR3*
29450018		ENERGY DATA SOFTWARE

Example design incorporating HIU

